Work Order ID 64336

Thursday, December 02, 2010 1:39:34 PM

Item ID: D4106-7 **Accept** **Setup Start**

Revision ID: **Stop**

Item Name: Template

Start Date: 12/2/2010 **Start Qty:** 10.00 **Cust Item ID:**

Required Date: 12/15/2010 **Req'd Qty:** 10.00 **Customer:**

Reference:

Approvals: **Process Plan:** _____ **Date:** 10-12-3 **Tooling:** _____ **Date:** _____ **Run Start**

QC: _____ **Date:** _____ **SPC (Y/N):** _____ **Date:** _____ **Stop**

Sequence ID/ Work Center ID	Operation Description	Set Up/ Run Hours	Tool ID	Tool #	Plan Code	Accept Qty	Reject Qty	Reject Number	Insp. Stamp
Draw Nbr / **Revision Nbr**									
D4106 / A									
100		0.00							
Waterjet	**Memo**	0.00							
FLOW CNC Waterjet LEXAN .060	1-Cut as per Dwg Dwg Rev: A Prog Rev: A 2-Deburr if necessary								
110	QC2- Inspect parts off machine FAI/FAIB	0.00							
QC Quality Control	**Memo**	0.00							

RB 10-12-20

10/12/20 (12)

RB 10-12-20

Dart Aerospace Ltd

W/O:		WORK ORDER CHANGES					
DATE	STEP	PROCEDURE CHANGE	By	Date	Qty	Approval Chief Eng / Prod Mgr	Approval QC Inspector

Part No: _____ **PAR #:** _____ **Fault Category:** _____ **NCR:** Yes No **DQA:** _____ **Date:** _____

Resolution: _____ **Disposition:** _____ **QA: N/C Closed:** _____ **Date:** _____

NCR:		WORK ORDER NON-CONFORMANCE (NCR)						
DATE	STEP	Description of NC Section A	Corrective Action Section B			Verification Section C	Approval Chief Eng	Approval QC Inspector
			Initial Chief Eng	Action Description Chief Eng	Sign & Date			

NOTE: Date & initial all entries

H:\fFORMS\Quality Assurance\approved QA\NCRWO RevE

Work Order ID 64336

Thursday, December 02, 2010 1:39:34 PM

Item ID: D4106-7 **Accept** **Setup Start**

Revision ID: **Stop**

Item Name: Template

Start Date: 12/2/2010 **Start Qty:** 10.00 **Cust Item ID:**

Required Date: 12/15/2010 **Req'd Qty:** 10.00 **Customer:**

Reference:

Approvals: **Process Plan:** _____ **Date:** _____ **Tooling:** _____ **Date:** _____ **Run Start**

QC: _____ **Date:** _____ **SPC (Y/N):** _____ **Date:** _____ **Stop**

Sequence ID/ Work Center ID	Operation Description	Set Up/ Run Hours	Tool ID	Tool #	Plan Code	Accept Qty	Reject Qty	Reject Number	Insp. Stamp
120	QC8- Inspect parts - second check	0.00				X12			
QC	Memo	0.00							
Quality Control									
130	Identify as per dwg & Stock Location: 128	0.00				10/12/20			
Packaging	Memo	0.00							
Packaging									
140	QC21- Final Inspection - Work Order Release	0.00					10/12/21		
QC	Memo	0.00							
Quality Control									

MF
10-12-21

Dart Aerospace Ltd

W/O:		WORK ORDER CHANGES					
DATE	STEP	PROCEDURE CHANGE	By	Date	Qty	Approval Chief Eng / Prod Mgr	Approval QC Inspector

Part No: _____ **PAR #:** _____ **Fault Category:** _____ **NCR:** Yes No **DQA:** _____ **Date:** _____

Resolution: _____ **Disposition:** _____ **QA: N/C Closed:** _____ **Date:** _____

NCR:		WORK ORDER NON-CONFORMANCE (NCR)						
DATE	STEP	Description of NC Section A	Corrective Action Section B			Verification Section C	Approval Chief Eng	Approval QC Inspector
			Initial Chief Eng	Action Description Chief Eng	Sign & Date			

NOTE: Date & initial all entries

H:\fFORMS\Quality Assurance\approved QA\NCRWO RevE

'Picklist Print

Thursday, December 02, 2010 1:39:37 PM

Work Order ID: 64336

Parent Item: D4106-7

Parent Item Name: Template

Start Date: 12/2/2010 **Requ..ed Date:** 12/15/2010

Start Qty: 10.00 **Required Qty:** 10.00

Comments: IPP Rev:A 10.09.24 new issue DD verf:EC

Component Item ID/ Item Name	Replacement Item ID	Mfg/ Purch	Bin Item	Primary Location	Last Location	Route Seq ID	Unit of Measure	Qty on Hand	Qty per Kit	Total Qty	Qty Issued	Date Issued	Status
MLEXS.060-9034-08		Purchased	No			100	sf	13.8000	0.2109	2.22			
.060" 9034 Lexan Sheet													

Location	Loc Qty	Loc Code
MAT	13.8	
115569	13.8	

JB 10-12-20

12

115569

Dart Aerospace Ltd

W/O:		WORK ORDER CHANGES					
DATE	STEP	PROCEDURE CHANGE	By	Date	Qty	Approval Chief Eng / Prod Mgr	Approval QC Inspector

Part No: _____ **PAR #:** _____ **Fault Category:** _____ **NCR:** Yes No **DQA:** _____ **Date:** _____

Resolution: _____ **Disposition:** _____ **QA: N/C Closed:** _____ **Date:** _____

NCR:		WORK ORDER NON-CONFORMANCE (NCR)						
DATE	STEP	Description of NC Section A	Corrective Action Section B			Verification Section C	Approval Chief Eng	Approval QC Inspector
			Initial Chief Eng	Action Description Chief Eng	Sign & Date			

NOTE: Date & initial all entries

H:\fFORMS\Quality Assurance\approved QA\NCRWO RevE

DART AEROSPACE LTD	Work Order:	64334
Description: Template	**Part Number:**	**D4106-7**
Inspection Dwg: D4106 **Rev:** A		**Page 1 of 1**

FIRST ARTICLE INSPECTION CHECKLIST

Drawing Dimension	Tolerance	Actual Dimension	Accept	Reject	Method of Inspection	Comments
1.68	+/-0.030	1.68	✓		V 1602	
4.77	+/-0.030	4.767	✓		V	
0.85	+/-0.030	.844	✓		V	
6.43	+/-0.030	6.43	✓		V	
6.37	+/-0.030	6.361	✓		V	
3.03	+/-0.030	3.025	✓		V	
0.060	+/-0.010	.063	✓		V	

Measured by:	HB	Audited by:		Preliminary Approval:	
Date:	10-17-20	Date:	10/12/20	Date:	

Rev	Date	Change	Revised by	Approved
A	10.10.07	New Issue	KJ	

Dart Aerospace Ltd

W/O:		WORK ORDER CHANGES					
DATE	STEP	PROCEDURE CHANGE	By	Date	Qty	Approval Chief Eng / Prod Mgr	Approval QC Inspector

Part No: _____ **PAR #:** _____ **Fault Category:** _____ **NCR:** Yes No **DQA:** _____ **Date:** _____

Resolution: _____ **Disposition:** _____ **QA: N/C Closed:** _____ **Date:** _____

NCR:		WORK ORDER NON-CONFORMANCE (NCR)						
DATE	STEP	Description of NC Section A	Corrective Action Section B			Verification Section C	Approval Chief Eng	Approval QC Inspector
			Initial Chief Eng	Action Description Chief Eng	Sign & Date			

NOTE: Date & initial all entries

H:\fFORMS\Quality Assurance\approved QA\NCRWO RevE

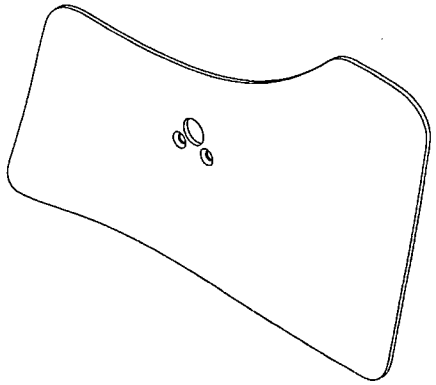

D4106-1 SILL DOUBLER, LH

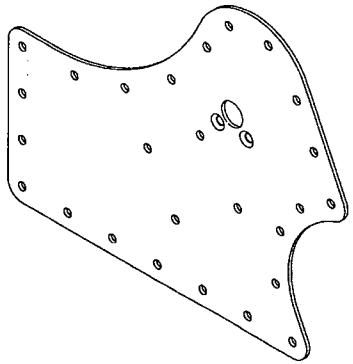

D4106-3 CREW DOOR DOUBLER, LH

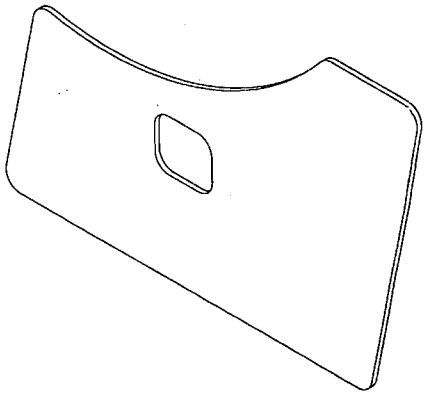

D4106-5 SPACER, SILL DOUBLER

SHOP COPY
RETURN TO
ENGINEERING
UNCONTROLLED COPY
SUBJECT TO AMENDMENT
WITHOUT NOTICE
WORK ORDER
NO. 64334
10-12-3

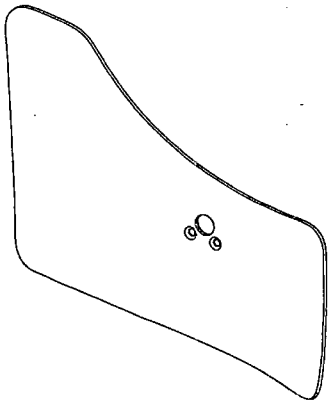

D4106-2 SILL DOUBLER, RH

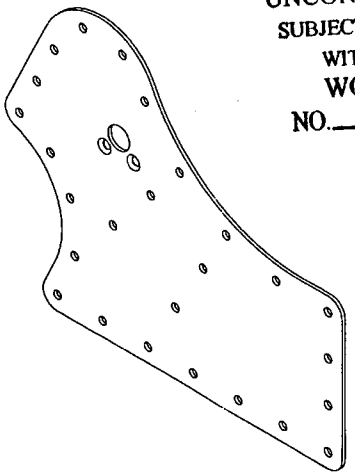

D4106-4 CREW DOOR DOUBLER, RH

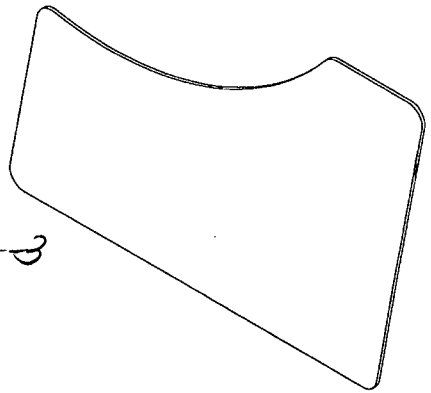

D4106-7 TEMPLATE

RELEASED
2010 -09- 23

REV.	DESCRIPTION	BY	DATE
A	NEW ISSUE	JPH	10.07.15

DESIGN	JPH	DART AEROSPACE LTD HAWKESBURY, ONTARIO, CANADA
DRAWN	JPH	
CHECKED		DRAWING NO. D4106 — REV. A
MFG. APPR.		SHEET 1 OF 5
APPROVED		TITLE: DOUBLERS — SCALE: NTS
DE APPR.		
DATE	10.07.15	

Dart Aerospace Ltd

W/O:		WORK ORDER CHANGES					
DATE	STEP	PROCEDURE CHANGE	By	Date	Qty	Approval Chief Eng / Prod Mgr	Approval QC Inspector

Part No: _____ **PAR #:** _____ **Fault Category:** _____ **NCR:** Yes No **DQA:** _____ **Date:** _____

Resolution: _____ **Disposition:** _____ **QA: N/C Closed:** _____ **Date:** _____

NCR:		WORK ORDER NON-CONFORMANCE (NCR)						
DATE	STEP	Description of NC Section A	Corrective Action Section B			Verification Section C	Approval Chief Eng	Approval QC Inspector
			Initial Chief Eng	Action Description Chief Eng	Sign & Date			

NOTE: Date & initial all entries

H:\fFORMS\Quality Assurance\approved QA\NCRWO RevE

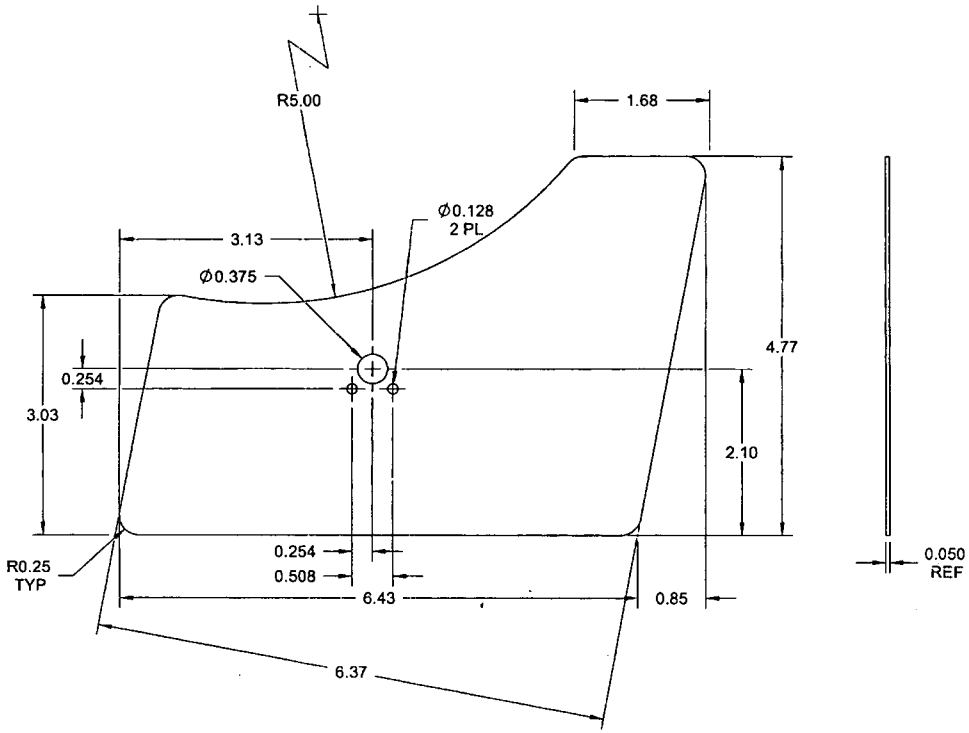

D4106-1F FLAT PATTERN, SILL DOUBLER

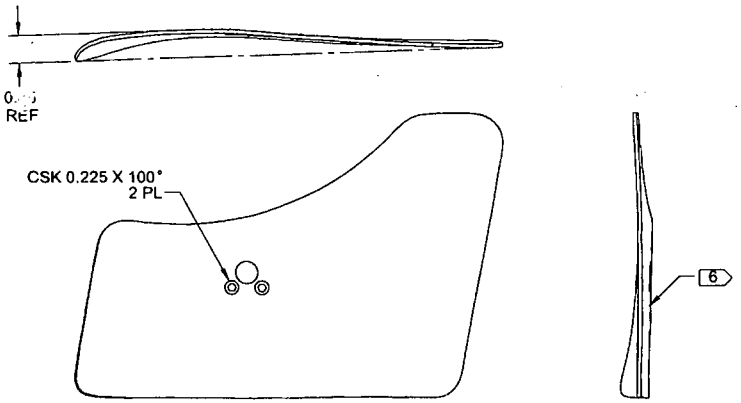

D4106-1 SILL DOUBLER, LH 8
(MAKE FROM D4106-1F)

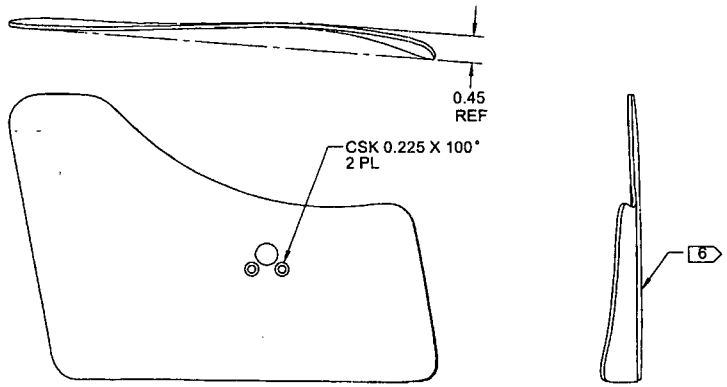

D4106-2 SILL DOUBLER, RH 8
(MAKE FROM D4106-1F)

RELEASE
2010 -09-

NOTES:
1) MATERIAL -1F: 303/304/316 STAINLESS STEEL SHEET ANNEALED 2B, 0.050 THK
PER MIL-S-5059 OR AMS 5513/5524 OR ASTM A240 OR ASME SA240
REF DART SPEC M304S18GA OR M303S18GA
-1 & -2: MAKE FROM D4106-1F.
2) FINISH: NONE
3) TOLERANCES: PER DART QSI 018 UNLESS OTHERWISE NOTED
4) UNITS: INCHES UNLESS OTHERWISE NOTED
5) BREAK SHARP EDGES: 0.005 TO 0.010 MAX
6) IDENTIFICATION -1 & -2: IDENT P/N D4106-X AND B/N PER QSI 044 6.1
7) WEIGHT -1 & -2: 0.34 lbs
8) FORM & INSPECT PER TEMPLATE DT9646 FOR D4106-1
DT9647 FOR D4106-2

W/O 64336

DESIGN	JPH	**DART AEROSPACE LTD** HAWKESBURY, ONTARIO, CANADA
DRAWN	JPH	
CHECKED		DRAWING NO. D4106 — REV. A — SHEET 2 OF 5
MFG. APPR.		
APPROVED		TITLE DOULBERS — SCALE NTS
DE APPR.		
DATE	10.07.15	

Dart Aerospace Ltd

W/O:		WORK ORDER CHANGES					
DATE	STEP	PROCEDURE CHANGE	By	Date	Qty	Approval Chief Eng / Prod Mgr	Approval QC Inspector

Part No: _____ **PAR #:** _____ **Fault Category:** _____ **NCR:** Yes No **DQA:** _____ **Date:** _____

Resolution: _____ **Disposition:** _____ **QA: N/C Closed:** _____ **Date:** _____

NCR:		WORK ORDER NON-CONFORMANCE (NCR)						
DATE	STEP	Description of NC Section A	Corrective Action Section B			Verification Section C	Approval Chief Eng	Approval QC Inspector
			Initial Chief Eng	Action Description Chief Eng	Sign & Date			

NOTE: Date & initial all entries

H:\fFORMS\Quality Assurance\approved QA\NCRWO RevE

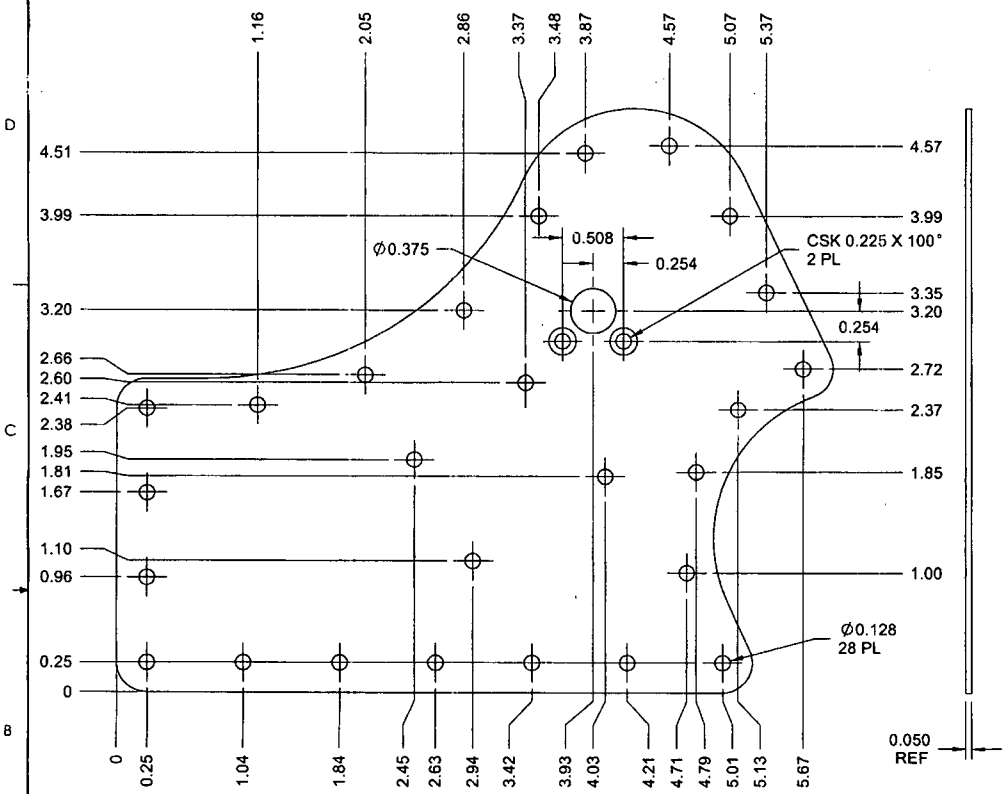

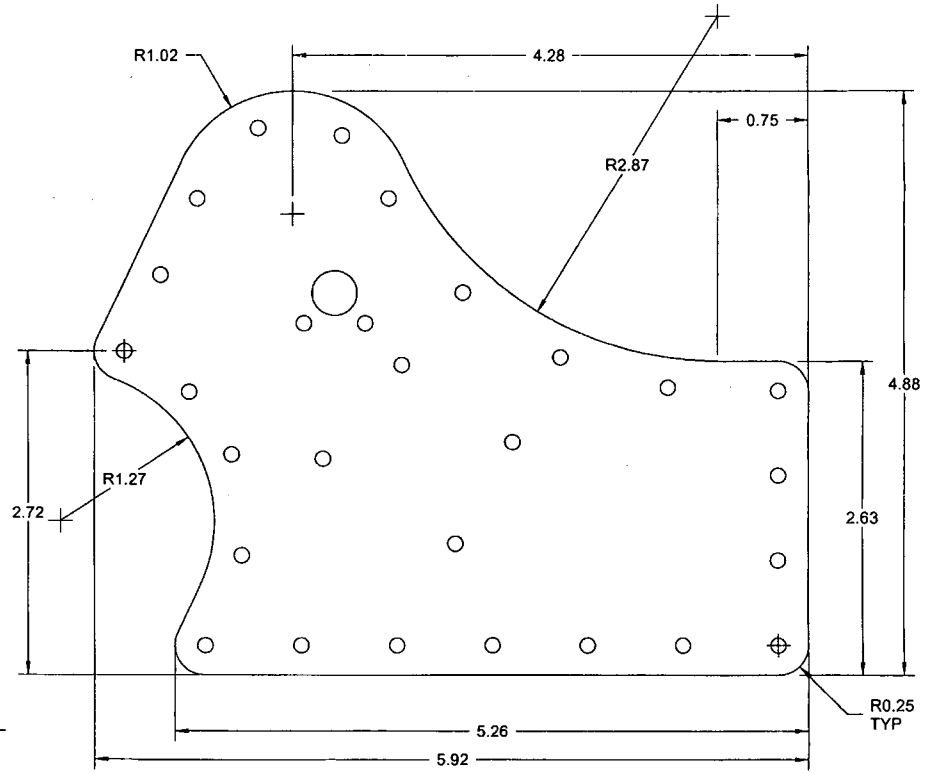

D4106-3 CREW DOOR DOUBLER, LH

RELEASED
2010 -09- 23

w/o 44336

NOTES:
1) MATERIAL: 303/304/316 STAINLESS STEEL SHEET ANNEALED 2B, 0.050 THK
PER MIL-S-5059 OR AMS 5513/5524 OR ASTM A240 OR ASME SA240
REF DART SPEC M304S18GA OR M303S18GA
2) FINISH: NONE
3) TOLERANCES: PER DART QSI 018 UNLESS OTHERWISE NOTED
4) UNITS: INCHES UNLESS OTHERWISE NOTED
5) BREAK SHARP EDGES: 0.005 TO 0.010 MAX
6) IDENTIFICATION: IDENT P/N D4106-3 AND B/N PER QSI 044 6.1
7) WEIGHT: 0.27 lbs

DESIGN	JPH	DART AEROSPACE LTD HAWKESBURY, ONTARIO, CANADA
DRAWN	JPH	
CHECKED		DRAWING NO. D4106 — REV. A — SHEET 3 OF 5
MFG. APPR.		
APPROVED		TITLE: DOUBLERS — SCALE: NTS
DE APPR.		
DATE	10.07.15	

Dart Aerospace Ltd

W/O:		WORK ORDER CHANGES					
DATE	STEP	PROCEDURE CHANGE	By	Date	Qty	Approval Chief Eng / Prod Mgr	Approval QC Inspector

Part No: _____ **PAR #:** _____ **Fault Category:** _____ **NCR:** Yes No **DQA:** _____ **Date:** _____

Resolution: _____ **Disposition:** _____ **QA: N/C Closed:** _____ **Date:** _____

NCR:		WORK ORDER NON-CONFORMANCE (NCR)						
DATE	STEP	Description of NC Section A	Corrective Action Section B			Verification Section C	Approval Chief Eng	Approval QC Inspector
			Initial Chief Eng	Action Description Chief Eng	Sign & Date			

NOTE: Date & initial all entries

H:\fFORMS\Quality Assurance\approved QA\NCRWO RevE

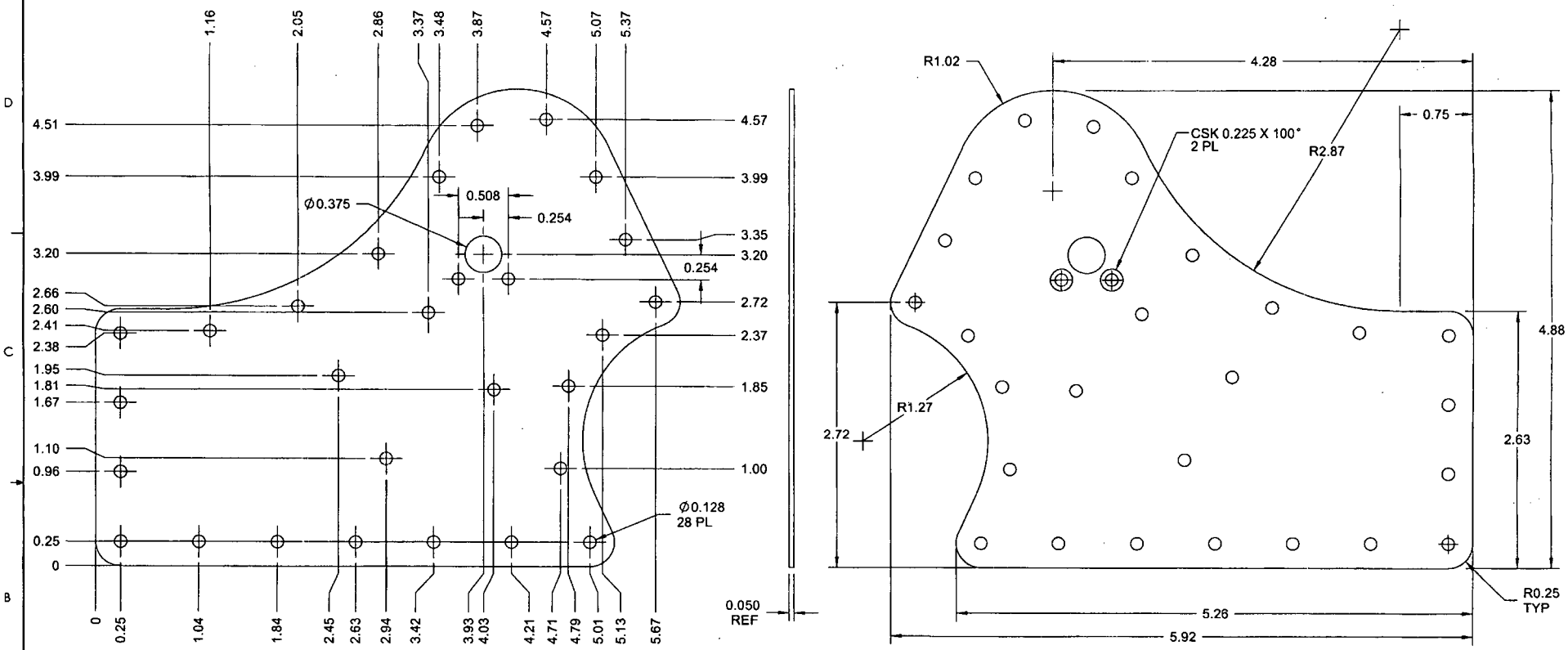

D4106-4 CREW DOOR DOUBLER, RH

w/064336

RELEASED
2010 -09- 23

NOTES:
1) MATERIAL: 303/304/316 STAINLESS STEEL SHEET ANNEALED 2B, 0.050 THK
PER MIL-S-5059 OR AMS 5513/5524 OR ASTM A240 OR ASME SA240
REF DART SPEC M304S18GA OR M303S18GA
2) FINISH: NONE
3) TOLERANCES: PER DART QSI 018 UNLESS OTHERWISE NOTED
4) UNITS: INCHES UNLESS OTHERWISE NOTED
5) BREAK SHARP EDGES: 0.005 TO 0.010 MAX
6) IDENTIFICATION: IDENT P/N D4106-4 AND B/N PER QSI 044 6.1
7) WEIGHT: 0.27 lbs

DESIGN	JPH	DART AEROSPACE LTD HAWKESBURY, ONTARIO, CANADA
DRAWN	JPH	
CHECKED		DRAWING NO. D4106 — REV. A — SHEET 4 OF 5
MFG. APPR.		
APPROVED		TITLE: DOUBLERS — SCALE: NTS
DE APPR.		
DATE	10.07.15	

Dart Aerospace Ltd

W/O:		WORK ORDER CHANGES					
DATE	STEP	PROCEDURE CHANGE	By	Date	Qty	Approval Chief Eng / Prod Mgr	Approval QC Inspector

Part No: _____ **PAR #:** _____ **Fault Category:** _____ **NCR:** Yes No **DQA:** _____ **Date:** _____

Resolution: _____ **Disposition:** _____ **QA: N/C Closed:** _____ **Date:** _____

NCR:		WORK ORDER NON-CONFORMANCE (NCR)						
DATE	STEP	Description of NC Section A	Corrective Action Section B			Verification Section C	Approval Chief Eng	Approval QC Inspector
			Initial Chief Eng	Action Description Chief Eng	Sign & Date			

NOTE: Date & initial all entries

H:\fFORMS\Quality Assurance\approved QA\NCRWO RevE

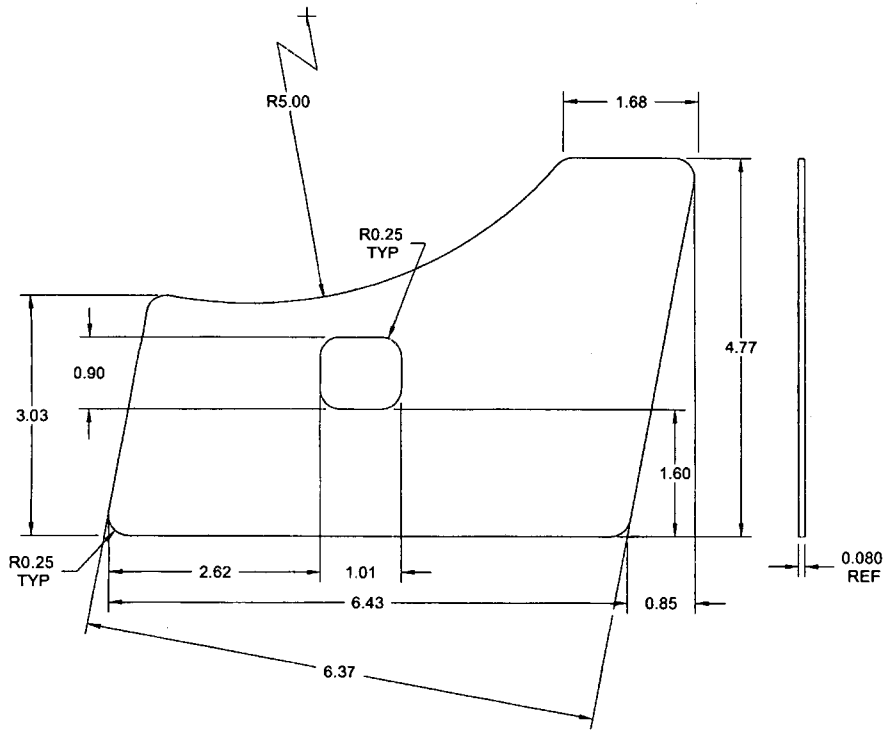

D4106-5 SPACER, SILL DOUBLER

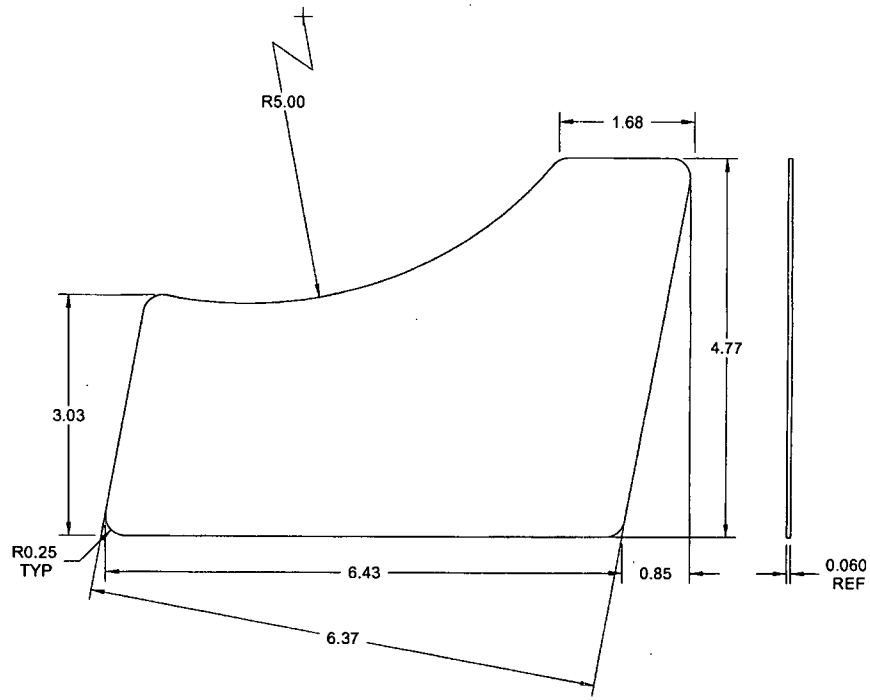

D4106-7 TEMPLATE

w/o 64336

RELEASED
2010 -09- 23

NOTES:
1) MATERIAL -5: KYDEX 6185 SHEET, 0.080 THK
REF DART MKYD6185S.080-P3-52068 OR MKYD6185S.080-P3-62015
-7: LEXAN 9034 SHEET, 0.060 THK
REF DART MLEXS.060-9034-08
OR POLYCAST II CLEAR ACRYLIC, .060 THICK.
REF DART M-ACRYLIC-S.060
2) FINISH: NONE
3) TOLERANCES: PER DART QSI 018 UNLESS OTHERWISE NOTED
4) UNITS: INCHES UNLESS OTHERWISE NOTED
5) BREAK SHARP EDGES: 0.005 TO 0.010 MAX
6) IDENTIFICATION: IDENT P/N D4106-X PER QSI 044 6.1
7) WEIGHT -5: 0.08 lbs
-7: N/A

DESIGN	JPH	DART AEROSPACE LTD HAWKESBURY, ONTARIO, CANADA
DRAWN	JPH	
CHECKED		DRAWING NO. D4106 — REV. A — SHEET 5 OF 5
MFG. APPR.		
APPROVED		TITLE: DOUBLERS — SCALE: NTS
DE APPR.		
DATE	10.07.15	

Dart Aerospace Ltd

W/O:		WORK ORDER CHANGES					
DATE	STEP	PROCEDURE CHANGE	By	Date	Qty	Approval Chief Eng / Prod Mgr	Approval QC Inspector

Part No: _____ **PAR #:** _____ **Fault Category:** _____ **NCR:** Yes No **DQA:** _____ **Date:** _____

Resolution: _____ **Disposition:** _____ **QA: N/C Closed:** _____ **Date:** _____

NCR:		WORK ORDER NON-CONFORMANCE (NCR)						
DATE	STEP	Description of NC Section A	Corrective Action Section B			Verification Section C	Approval Chief Eng	Approval QC Inspector
			Initial Chief Eng	Action Description Chief Eng	Sign & Date			

NOTE: Date & initial all entries

H:\fFORMS\Quality Assurance\approved QA\NCRWO RevE